BREAK-TOP/RANGER II INSTRUCTION CARD

LOADING YOUR BREAK-TOP

Put the hammer in half-cock position. Pull the serrated frame latch back towards the hammer.

When the frame latch clears the barrel latch, the full barrel/cylinder assembly should pivot freely. You can now load your weapon.

To close: Simply ensure that the cylinder rests fully forward against the barrel and that the hammer is in the half-cock position. Close the assembly gently and then press firmly against the barrel latch assuring that the frame latch is fully closed and sits firmly against the top strap.

Do not pull back frame latch to close barrel. Immediately insert the hammer into a safety slot; half-cock is NOT a safety.

Practice the cocking action with an empty cylinder before firing live ammunition. ***Excessive Dry Firing is to be avoided!***

UNLOADING

Put the hammer in half-cock position. Pull the serrated frame latch back towards the hammer.

When the frame latch clears the barrel latch, the full barrel/cylinder assembly should pivot freely. Rotate the assembly 45 degrees from the frame, engaging the cam. This causes the star to move away from the cylinder. As the star moves, it will begin to extract the empty shell casings from the cylinder.



The star movement will increase as the assembly swings forward, rotating to approximately 120 degrees. This is its full travel. You may now extract all your spent casings.

Pivot the frame downward slowly to closed position until the star seats into cylinder. You can now reload your weapon.

Again, carefully close the top.

Safety/Loading/Unloading video instructions can be found on our website: northamericanarms.com as well as our Youtube account.

REMOVING THE CYLINDER

(This is only necessary for the cleaning and exchanging of cylinders.)

Simply break open the gun by disengaging the latch. Lift the barrel latch to disengage the cylinder. This lever disengages the cylinder catch at the end of the lever which allows the cylinder to be removed from the cylinder post.

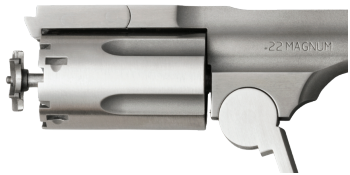

When returning the cylinder to the post, insure that the catch re-engages with the cylinder.

Carefully close the gun.

EXPLODED VIEW

1	5510	Frame
6	1409	Bead Sight
7	5130-7	Barrel Latch Pin
8	5130-6	Barrel Latch Spring
11	5200-5	Frame Pivot Pin
12	5200-2	Frame Latch Spring
13	1250	Index Spring
15	1210BT	Hammer
16	1406	Main Spring
17	1230	Hand Spring
20	1140	Main Screw
21	1404	Trigger Pin
23	1405	Trigger Spring
24	1407	Bolt Pin
25	11401	Cylinder Bolt
26	2402	Mag Bolt Spring
27	5200-4	Shaft Ejector
29	5200-3	Frame Latch Screw
30	GST-M	Wood Grip Set
31	1510	Grip Screw

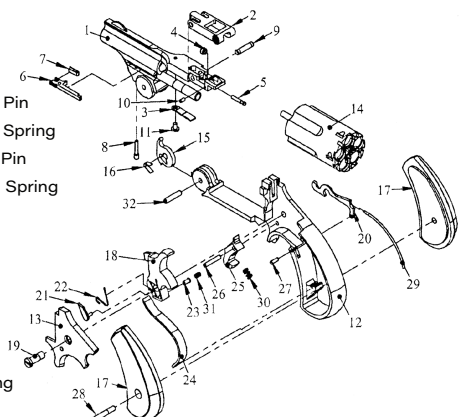

(parts not listed require factory installation)

parts & accessories available at northamericanarms.com